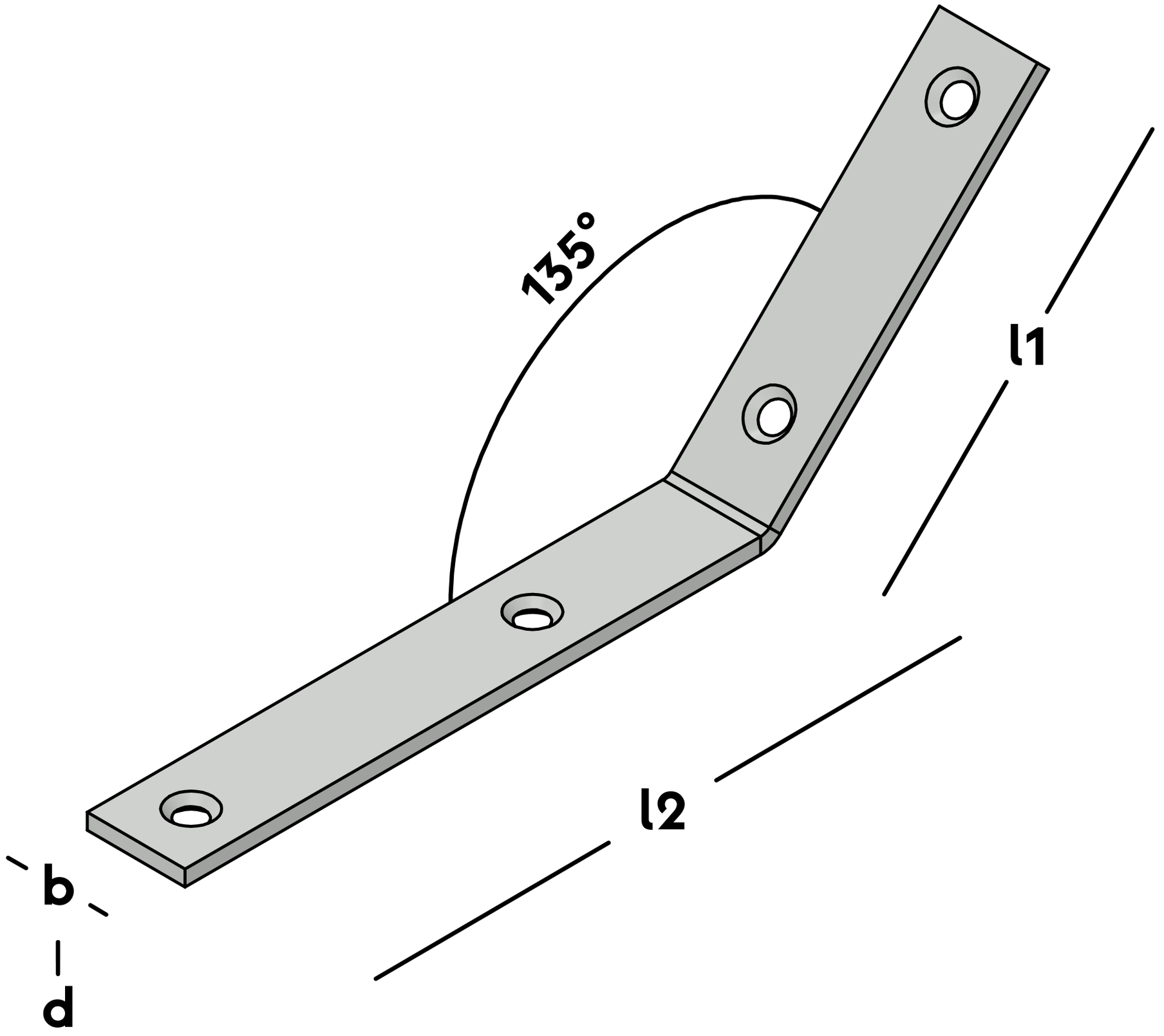
135°
l1
l2
b
d